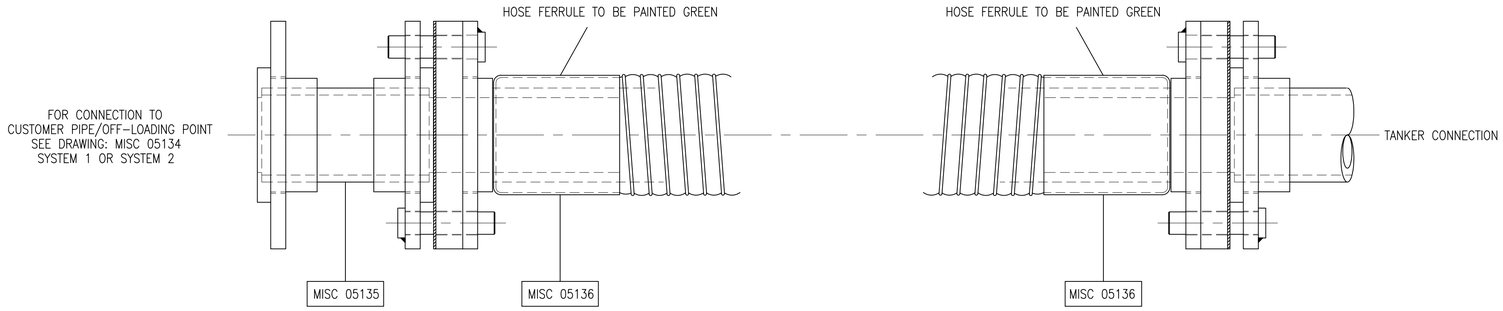

SINGLE HOSE ASSEMBLY WITH CONVERTED FLANGE END

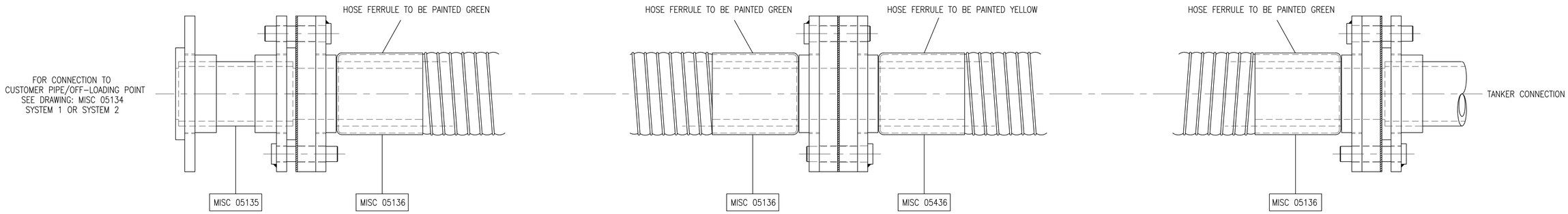

DOUBLE HOSE ASSEMBLY WITH CONVERTED FLANGE END

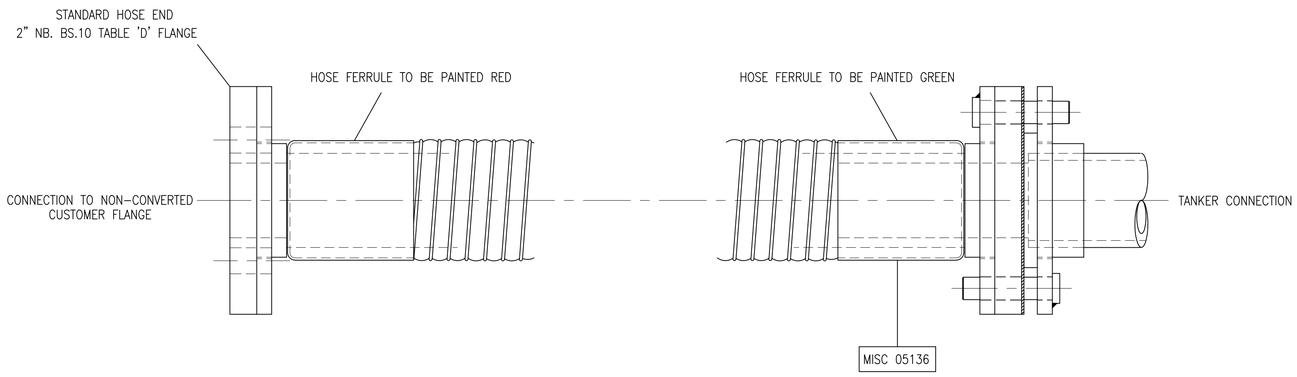

SINGLE HOSE ASSEMBLY WITH NON-CONVERTED FLANGE END

ISSUE	EC NUMBER	REVISIONS	DRAWN	DATE	CHECK	DATE	PROJ	DATE	MECH	DATE	ELECT	DATE	CIVIL	DATE
B		2" NB. BS.10 TABLE 'D' WAS 2" NB. BS.4504 TABLE 'D'	DRL	13.02.17										
A		FIRST ISSUE	DRL	08.11.16										

ISSUE	EC NUMBER	REVISIONS	DRAWN	DATE	CHECK	DATE	PROJ	DATE	MECH	DATE	ELECT	DATE	CIVIL	DATE

THIS DRAWING IS THE PROPERTY OF THE INDUSTRIAL CHEMICALS GROUP LIMITED AND ITS SUBSIDIARY COMPANIES AND MUST NOT BE USED FOR ANY PURPOSE DETRIMENTAL TO THE INTERESTS OF INDUSTRIAL CHEMICALS GROUP LIMITED OR ITS SUBSIDIARY COMPANIES. ITS CONTENTS ARE NOT TO BE DISCLOSED TO ANY THIRD PARTY EITHER WHOLLY OR IN PART WITHOUT THE CONSENT OF INDUSTRIAL CHEMICALS GROUP LIMITED OR ITS SUBSIDIARY COMPANIES.

SCALE 1:1
DIMS MM

INDUSTRIAL CHEMICAL GROUP LTD

DRAWING NO. MISC 05437

TITLE 2" BS.10 TABLE 'D'. ANTI TAMPER HOSE ASSEMBLY VARIATIONS.

FILE LOCATION:T:\Drawings\ | JOB NO. | ISSUE B | A1